STAND ALONE TORCH LIFTER

Wiring diagram of CAP04 to H-Bridge9 with CAP-HB 03 interface card

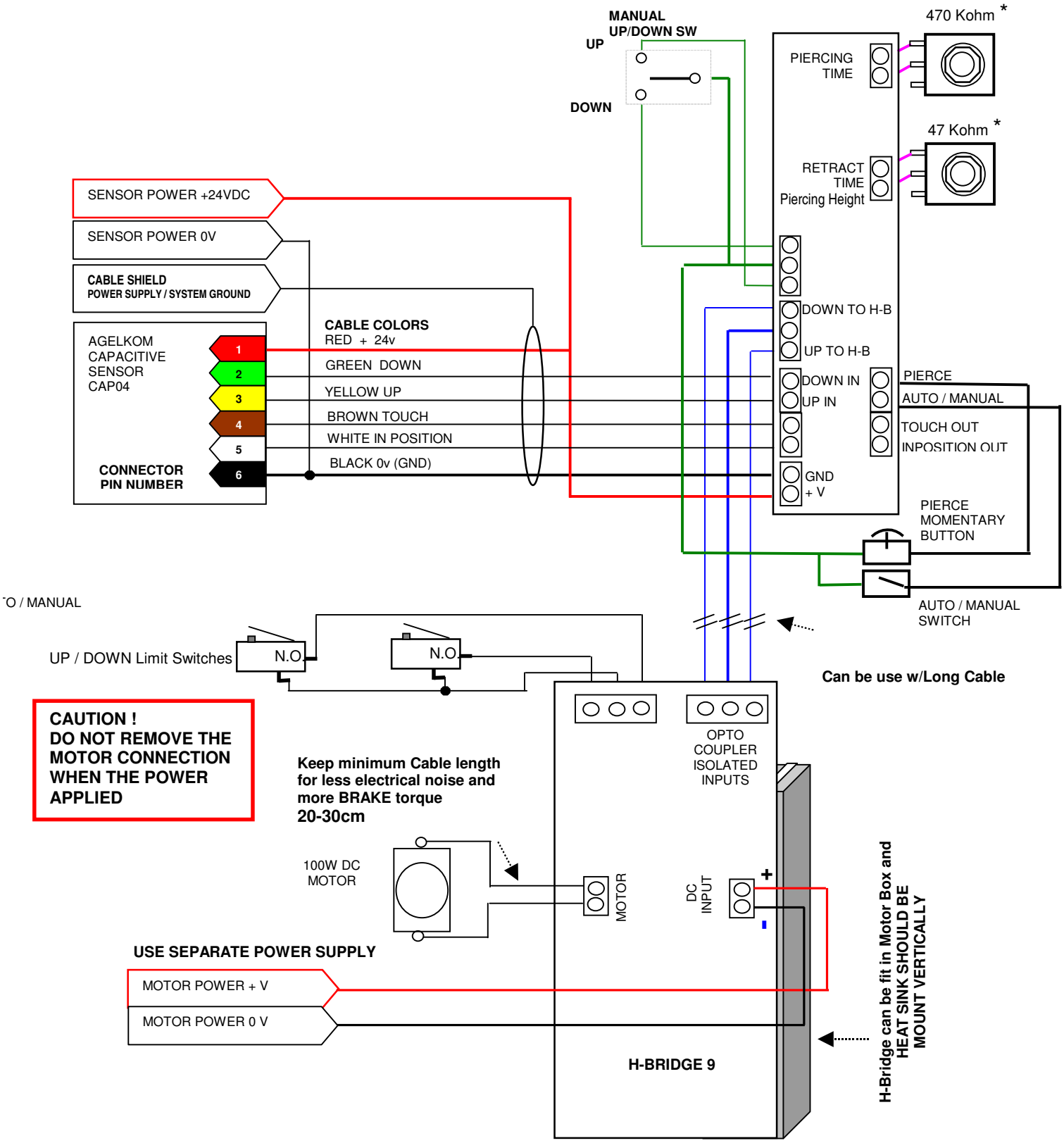

* Potentiometers value may vary depends on your torch lifter mechanism and plasma generator.